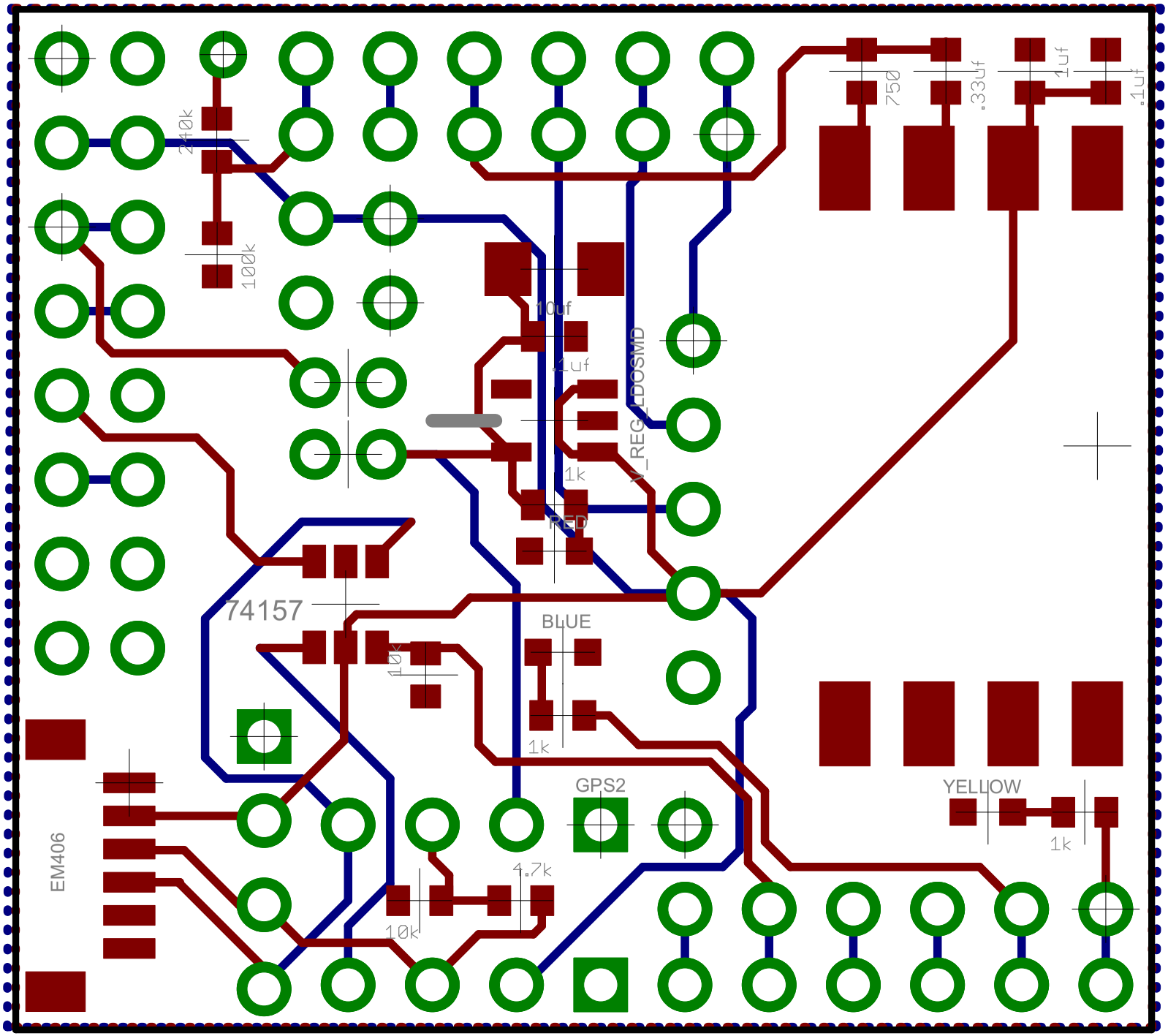
240k
100k
10uf
.1uf
1k
RED
V_REG_LDOSMD
750
.33uf
1uf
.1uf
74157
10k
BLUE
1k
GPS2
YELLOW
1k
EM406
4.7k
10k